All rights reserved by **CNHi.**
The information contained in this catalogue is intended to be of a general nature only. **CNHi.** may at any time and from time to time, for technical or other necessary reasons, modify any of the details or specifications of the product described in this catalogue.
To be sure of getting accurate, detailed and up-to-date information, an intending buyer should consult his nearest **CNHi.** dealer or distributor.
Single item numeration method used in this catalogue may not be used without written consent from **CNHi.**

© 2014 **CNHi**

31.220.AD	01	p1	10/2014

VAR - 123782, 789101,987654 - PTO - D650

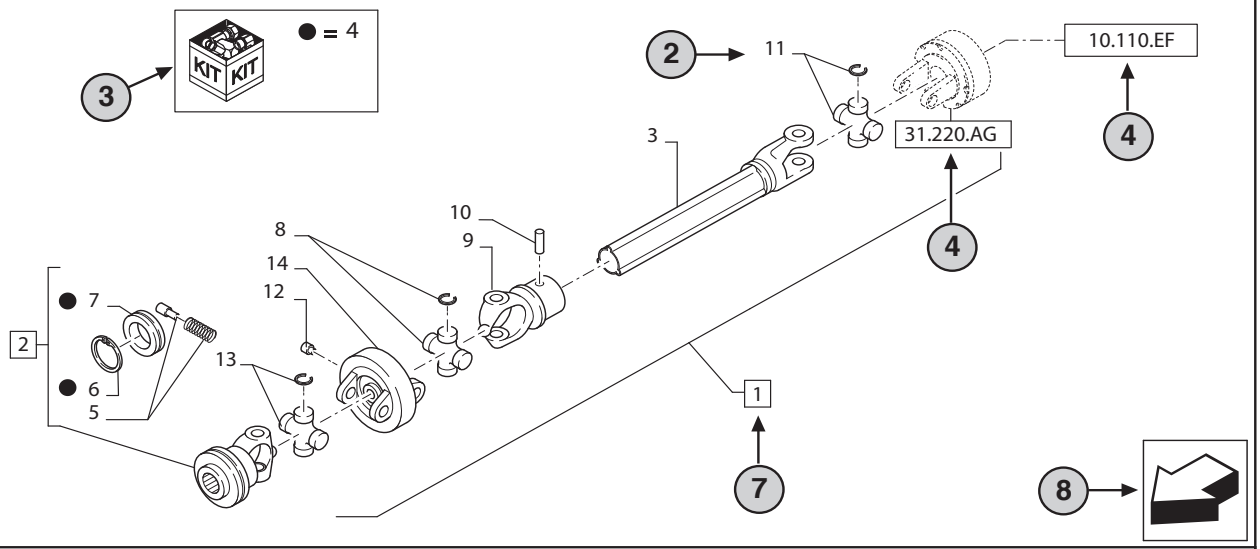

STANDARD ← 6

23 9 10

31.220.AD	01	p1	10/2014

VAR - 123782, 789101,987654 - PTO - D650

11 12 13 14

REF	FN	PART NUMBER	YR/SN	QTY	DESCRIPTION
1	1	**86529340**	20	1	SHAFT PTO, Incl 2 - 11
2	15	**84014007**		1	YOKE, Incl 4 -7 ← 7
3	16	**NSS**		1	NOT SERVICED SEPARATELY, SHAFT, 350mm, Incl in 1
4		**84004292**		1	KIT, Seal Kit, Incl 6, 7 17
4		**{84058743}**		1	KIT, Seal Kit, Incl 6, 7
2	18	19		21	22

1 = FOR ITALY ONLY ← 5

MODELS ← 1

1 Model Number and Model Description

2 Reference - Figure call-out of the part number.

3 Parts supplied in repair kits per symbol reference.

4 31.220.AD — Part illustrated on the **Page** or in the **Figure** indicated, or calls for **Variations** or **Details**.Indicates components shown in detail elsewhere in the catalogue under the figure number shown.

5 Footnote references

6 Figure notes

7 1 2 Includes item(s) ..... (See Description within partlist).

8 Orientation. (Arrow indicates front of the machine).

9 Figure description.

10 General information of the figure.

11 Figure title number that aligns with the SRT. Standard Repair Time.

12 **Sequence** code within the assembly.

13 Page number within the sequence code.

14 **Date** of printing or updating of page (month-year).

15 **Note** - Relating to the Part Number. There is a key to symbols and abbreviations at the bottom of the text page.

16 Non-serviced parts.

17 Further description of the part to help confirm identification.

18 Not available as service part.

19 Part Number.

20 To be defined.

21 Total **Quantity** of the Part referred to in the page.
The quantity can be replaced by the following indications:
AR = quantity as requested.

22 Part **Description**.

23 Variant Codes

TABLE OF CONTENTS

88.090.01		DIA KIT, NARROW DYNAMIC FRONT FENDERS
0.0039		SERVICE MAINTENANCE KIT
0.0040		VARIATION
0.0040/01		VARIATION
0.0040/02		VARIATION
0.0040/03		VARIATION
0.0040/04		VARIATION
0.0040/05		VARIATION
0.0042		SERVICE PARTS CATALOGUE AND BINDER
0.01.1		INITIAL STOCKING LIST (ISL) FOR N.A.ONLY
0.05.4	01	MAINTENANCE PARTS - FILTERS
0.05.4	02	MAINTENANCE PARTS - STARTER MOTOR, ALTERNATOR, BELTS
0.05.4	03	MAINTENANCE PARTS - FUSES
0.05.4	04	MAINTENANCE PARTS - BULBS
0.05.4	04	MAINTENANCE PARTS - BULBS
0.05.4	05	MAINTENANCE PARTS - PUMPS
D.I.A.		DEALER INSTALLED ACCESSORY KITS INDEX
MAIN		MAIN SECTIONS
SEC. 01	01	ENGINE
SEC. 01	02	ENGINE
SEC. 02		ENGINE EQUIP.
SEC. 03		TRANSMISSION
SEC. 04		FRONT AXLE
SEC. 05		REAR AXLE
SEC. 06		ELECTRICAL
SEC. 07		HYDRAULICS
SEC. 08		SHEET METAL
SEC. 09		LINKAGE
SEC. 10		DRIVER'S COMPARTMENT
SEC. 11	01	TRACTION
SEC. 11	02	TRACTION
SEC. 13		DECALS
0.02.1		ENGINE ASSY
0.02.1/01		ENGINE ASSY

TABLE OF CONTENTS

0.04.0	01	**CYLINDER BLOCK & RELATED PARTS**
0.04.0	02	**ENGINE - BLOCK HEATER - NA**
0.04.2		**OIL SUMP & RELATED PARTS**
0.04.3	01	**ENGINE BLOCK FRONT COVER**
0.04.3	02	**FLYWHEEL CASE**
0.04.5		**ENGINE BREATHERS**
0.06.0		**CYLINDER HEAD & RELATED PARTS**
0.06.3		**CYLINDER HEAD COVERS**
0.06.6		**ROCKER SHAFT**
0.07.1		**INTAKE MANIFOLD**
0.07.7		**EXHAUST MANIFOLD**
0.08.0		**CRANKSHAFT**
0.08.1		**CONNECTING ROD**
0.08.2		**PISTON - ENGINE**
0.08.3		**FLYWHEEL**
0.08.4		**PULLEY - CRANKSHAFT**
0.10.5		**DYNAMIC BALANCER, GEARS & SHAFTS**
0.12.0		**CAMSHAFT - TIMING CONTROL**
0.14.0	01	**INJECTION PUMP**
0.14.0	02	**INJECTION EQUIPMENT - INJECTOR**
0.14.0/01		**INJECTION PUMP**
0.14.6		**INJECTION EQUIPMENT - PIPING**
0.14.6/01		**INJECTION EQUIPMENT - PIPING**
0.14.9		**INJECTION EQUIPMENT - PIPING**
0.14.9/01		**INJECTION EQUIPMENT - PIPING**
0.17.3		**CONNECTIONS CABLE FOR ENGINE INJECTION**
0.17.3/01		**CONNECTIONS CABLE FOR ENGINE INJECTION**
0.20.0		**FUEL FILTER**
0.20.1		**FUEL PUMP**
0.20.3		**PIPING - FUEL**
0.20.3/01		**PIPING - FUEL**
0.20.4		**INJECTION EQUIPMENT - PIPING**
0.20.4/01		**INJECTION EQUIPMENT - PIPING**
0.24.0		**TURBOCHARGING**

TABLE OF CONTENTS

0.27.0		ENGINE OIL DIPSTICK
0.30.0		PUMP, ENGINE OIL & RELATED PARTS
0.30.2		FILTER ENGINE OIL
0.30.5		OIL PUMP PIPING
0.31.0		HEAT EXCHANGER
0.32.0		WATER PUMP & RELATED PARTS
0.32.3		PIPING - ENGINE COOLING SYSTEM
0.32.6		TEMPERATURE CONTROL (THERMOSTAT)
0.34.0		ENGINE, BELT
0.34.5		FAN DRIVE
0.35.0		POWER TAKE OFF
0.36.0		STARTER MOTOR
0.40.0		ALTERNATOR
0.45.0		HOOKS - ENGINE
0.70.0		DIAGNOSTIC SENSOR
0.88.0	01	AIR CONDITIONING UNIT - BELTS AND COMPRESSOR (VAR.330638-332638-333638-330641)
0.88.0	02	AIR CONDITIONING UNIT - CONDENSER (VAR.330638-332638-333638-330641)
0.88.0	03	AIR CONDITIONING UNIT - FILTER AND PIPES (VAR.330638-332638-333638-330641)
0.88.0	04	AIR CONDITIONING UNIT - FILTER AND PIPES (VAR.330638-332638-333638-330641) - C7031
0.88.0	04A	AIR CONDITIONING UNIT - FILTER AND PIPES (VAR.330638-332638-333638-330641) - D7031
1.10.0		THROTTLE CONTROL LINKAGE
1.14.0		FUEL TANK
1.14.0/01		FUEL TANK SHIELD PROTECTION (VAR.330135)
1.14.0/02		FUEL TANK GUARD (JAPAN) (VAR.330136)
1.14.6		FUEL PIPES
1.14.7		FUEL TANK SUPPORT
1.15.1		SILENCER (MUFFLER)
1.15.1/01		VERTICAL EXHAUST W/GUARD SHIELD - GUARD (VAR.330134-332134)
1.15.1/02		"A" PILLAR TYPE VERTICAL EXHAUST W/ GUARD SHIELD FOR CAB - W/OPENING WINDSCREEN (VAR.332466)
1.15.1/03		HORIZONTAL EXHAUST WITH GUARD SHIELD (VAR.330150)
1.15.1/04		"A" PILLAR TYPE VERTICAL EXHAUST WITH GUARD SHIELD FOR FRONT LOADER READY (VAR.333466)
1.15.1/05		VERTICAL EXHAUST LESS GUARD SHIELD (VAR.331134)
1.15.1/06		"A" PILLAR TYPE VERTICAL EXHAUST W/ GUARD SHIELD FOR CAB (VAR.331466)

TABLE OF CONTENTS

1.17.0	01	RADIATOR AND COOLING TANK
1.17.0	02	RADIATOR & RELATED PARTS
1.19.1	01	DRY AIR CLEANER
1.19.1	02	DRY AIR CLEANER
1.19.1/01		DRY AIR CLEANER WITH DUST EJECTOR (VAR.330200)
1.21.0	01	TRACTOR BODY
1.21.0	02	TRACTOR BODY
1.21.0	03	TRACTOR BODY
1.21.1		SUPPORT
1.21.1/01		FRONT LOADER BRACKETS - BRACKETS (VAR.331489-332489)
1.21.1/02		FRONT AXLE WITH EL.HYDR. DIFF. LOCK (40 KM/H) FOR FRONT HPL- SUPPORT (VAR.332323-335329)
1.21.1/03	01	SUPERSTEER FRONT AXLE - SUPPORT (VAR.331403-330433-331433-330434-331434-332434)
1.21.1/03	02	SUPERSTEER FRONT AXLE - CONNECTING JOINT TO MAIN TRANSMISSION SHAFT (VAR.331403-330433-331433-330434-331434-332434)
1.21.1/03	03	SUPERSTEER FRONT AXLE - FRONT 4WD AXLE BOOM (VAR.331403-330433-331433-330434-331434-332434)
1.21.1/03	04	SUPERSTEER FRONT AXLE - TRANSVERSAL TIE-RODS (VAR.331403-330433-331433-330434-331434-332434)
1.21.1/03A		CONNECTING JOINT TO MAIN TRANSMISSION SHAFT - BREAKDOWN
1.21.1/04		2WD FRONT AXLE - SUPPORT (VAR.330581-330582)
1.21.1/05	01	SUPERSTEER FRONT AXLE FOR FRONT HPL AXLE MOUNTED - SUPPORT (VAR.333434)
1.21.1/05	02	SUPERSTEER FRONT AXLE FOR FRONT HPL AXLE MOUNTED - CONNECTING JOINT TO MAIN TRANSMISSION SHAFT (VAR.333434)
1.21.1/05	03	SUPERSTEER FRONT AXLE FOR FRONT HPL AXLE MOUNTED - FRONT 4WD AXLE BOOM (VAR.333434)
1.21.1/05	04	SUPERSTEER FRONT AXLE FOR FRONT HPL AXLE MOUNTED - TRANSVERSAL TIE-RODS (VAR.333434)
1.25.0		CLUTCH
1.25.0/01		16X16 AND 32X16 HYDRAULIC TRANSMISSION - CLUTCH (VAR.330275-330278)
1.26.2	01	LEVERS AND TIEROD
1.26.2	02	LEVERS AND TIEROD
1.26.5		PTO ENGAGEMENT CLUTCH
1.27.3	01	32X16 HYDR. TRANSMISSION - SOLENOID VALVES
1.27.3	02	32X16 HYDR. TRANSMISSION - CAPS
1.27.3/01	01	WATERPROOF TRANSM. FOR HI-LO AND POWER SHUTTLE - SOLENOID VALVE (VAR.333448-335448)
1.27.3/01	02	WATERPROOF TRANSM. FOR HI-LO AND POWER SHUTTLE - COVER AND CAPS (VAR.333448-335448)
1.27.3/02	01	POWER SHUTTLE - CONTROL VALVE WITH SOLENOIDS - C7481 (VAR.330402-331402-333402)
1.27.3/02	01A	POWER SHUTTLE - CONTROL VALVE WITH SOLENOIDS - D7481 (VAR.330402-331402-333402)

TABLE OF CONTENTS

1.27.3/02	02	POWER SHUTTLE - PIPES AND MANIFOLDS (VAR.330402-331402-333402)
1.27.3/03	01	4WD TRACTION SELECTION WITH 32X16 HYDR. TRANSMISSION - SOLENOID VALVES (VAR.332402-335402)
1.27.3/03	02	4WD TRACTION SELECTION WITH 32X16 HYDR. TRANSMISSION - CAPS - C6319 (VAR.332402-335402)
1.27.3/03	03	4WD TRACTION SELECTION WITH 32X16 HYDR. TRANSMISSION - ACCUMULATOR AND PIPES (VAR.332402-335402)
1.27.3/03	04	4WD TRACTION SELECTION WITH 32X16 HYDR. TRANSMISSION - MANIFOLD AND PIPES (VAR.332402-335402)
1.27.3/03A		ACCUMULATOR - BREAKDOWN
1.27.3/04	01	POWER SHUTTLE - CONTROL VALVE WITH SOLENOIDS (VAR.334401)
1.27.3/04	02	POWER SHUTTLE - PIPES AND MANIFOLDS
1.27.3/05	01	2WD TRACTION SELECTION WITH 32X16 HYDR. TRANSMISSION - SOLENOID VALVES (VAR.336401)
1.27.3/05	02	2WD TRACTION SELECTION WITH 32X16 HYDR. TRANSMISSION - CAPS - C6319 (VAR.336401)
1.27.3/05	03	2WD TRACTION SELECTION WITH 32X16 HYDR. TRANSMISSION - ACCUMULATOR AND PIPES (VAR.336401)
1.27.3/05	04	2WD TRACTION SELECTION WITH 32X16 HYDR. TRANSMISSION - MANIFOLD AND PIPES (VAR.336401)
1.27.7	01	MEGA FLOW PUMP (62 L/MIN) AND OIL COOLER - RADIATOR & PIPES (VAR.330823-332823)
1.27.7	02	MEGA FLOW PUMP (62 L/MIN) AND OIL COOLER - BRACKETS (VAR.330823-332823)
1.28.1	01	TRANSMISSION GEARS
1.28.1	02	TRANSMISSION GEARS
1.28.1	03	TRANSMISSION GEARS
1.28.1	04	TRANSMISSION GEARS
1.28.1/01	01	16X16 HYDRAULIC TRANSMISSION WITH SYNCHRO GEARS AND POWER SHUTTLE - GEAR SHAFT (VAR.330278)
1.28.1/01	02	16X16 HYDRAULIC TRANSMISSION WITH SYNCHRO GEARS AND POWER SHUTTLE - DRIVEN GEARS (VAR.330278)
1.28.1/01	03	16X16 HYDRAULIC TRANSMISSION WITH SYNCHRO GEARS AND POWER SHUTTLE - TRANSM. GEARS (VAR.330278)
1.28.1/01	04	16X16 HYDRAULIC TRANSMISSION WITH SYNCHRO GEARS AND POWER SHUTTLE - TRANSM. GEARS (VAR.330278)
1.28.1/02	01	32X16 WITH SYNCHRO GEARS AND SYNCHRO SHUTTLE WITH MECHANICAL SPLITTER - CLUTCH SHAFT (VAR.330118)
1.28.1/02	02	32X16 WITH SYNCHRO GEARS AND SYNCHRO SHUTTLE WITH MECHANICAL SPLITTER - ROD AND FORK (VAR.330118)
1.28.1/03	01	28X16 FÜR 16X16 MECHANISCHE GETRIEBE (CREEPER) - REVERS. DRIVEN GEAR (VAR.330111)
1.28.1/03	02	28X16 FOR 16X16 MECHANICAL TRANSMISSION (CREEPER) - CLUTCH SHAFT (VAR.330111)
1.28.1/04		44X16 FOR 32X16 HI-LO AND POWER SHUTTLE - ROD AND FORK (VAR.331111)
1.28.7		DRIVE GEAR SHAFT AND DRIVEN GEARS
1.28.7/01	01	32X16 HI-LO AND POWER SHUTTLE TRANSMISSION - CLUTCH COVER PLATE (VAR.330275)
1.28.7/01	02	32X16 HI-LO AND POWER SHUTTLE TRANSMISSION - CLUTCH DISKS (VAR.330275)
1.28.7/01	03	32X16 HI-LO AND POWER SHUTTLE TRANSMISSION - CLUTCH DISKS (VAR.330275)

TABLE OF CONTENTS

1.28.7/01	04	32X16 HI-LO AND POWER SHUTTLE TRANSMISSION - DRIVE GEAR SHAFT (VAR.330275)
1.28.7/01	05	32X16 HI-LO AND POWER SHUTTLE TRANSMISSION - DRIVEN GEARS (VAR.330275)
1.28.7/01	06	32X16 HI-LO AND POWER SHUTTLE TRANSMISSION - DRIVEN GEARS (VAR.330275)
1.28.7/01	07	32X16 HI-LO AND POWER SHUTTLE TRANSMISSION - GEARBOX HYDRAULIC CONTROL (VAR.330275)
1.28.7/02	01	16X16 HYDRAULIC TRANSMISSION WITH SYNCHRO GEARS AND POWER SHUTTLE - CLUTCH COVER PLATE (VAR.330278)
1.28.7/02	02	16X16 HYDRAULIC TRANSMISSION WITH SYNCHRO GEARS AND POWER SHUTTLE - CLUTCH DISKS (VAR.330278)
1.28.7/02	03	16X16 HYDRAULIC TRANSMISSION WITH SYNCHRO GEARS AND POWER SHUTTLE - CLUTCH DISKS (VAR.330278)
1.28.7/02	04	16X16 HYDRAULIC TRANSMISSION WITH SYNCHRO GEARS AND POWER SHUTTLE - DRIVEN GEAR SHAFT (VAR.330278)
1.28.8	01	GEAR LUBRICATION SYSTEM
1.28.8	02	GEAR LUBRICATION SYSTEM
1.28.8/ A		GEAR LUBRICATION SYSTEM - BREAKDOWN - C7192
1.28.8/ B		GEAR LUBRICATION SYSTEM - BREAKDOWN - D7192
1.28.8/01		REAR MECHANICAL DIFF. LOCK FOR MECHANICAL TRANSM. - GEAR LUBRIFICATION SYSTEM (VAR.330381-331381-332382-336382)
1.28.8/02		REAR HYDRAULIC DIFF. LOCK FOR HYDRAULIC TRANSMISSION - UNIONS AND PIPES (VAR. 332381-334381-335381-331382-333382-334382-335382-337382-338382-339382)
1.29.0		GEARBOX INNER CONTROLS, RODS AND FORKS
1.29.1	01	TRANSMISSION EXTERNAL SHIFTING CONTROLS
1.29.1	02	TRANSMISSION EXTERNAL SHIFTING CONTROLS
1.29.1/01		SPEED LEVER KNOB WITH 2 SWITCHES FOR HI-LO AND POWER SHUTTLE (VAR.333846)
1.29.1/02	01	INTERLOCK FOR MECHANICAL TRANSMISSION - NA - BRACKET AND TIE-ROD (VAR.332111)
1.29.1/02	02	INTERLOCK FOR MECHANICAL TRANSMISSION - NA - BRACKET AND TIE-ROD (VAR.332111)
1.29.1/02	03	NA PACKAGE - TRANSMISSION INTERNAL SHIFTING CONTROLS (VAR.332111)
1.29.1/03		MULTICONTROLLER F/POWER CLUTH, EFMPL AND HI-LO POWER SHUTTLE (VAR.338846)
1.32.1	01	CENTRAL REDUCTION GEARS
1.32.1	02	CENTRAL REDUCTION GEARS
1.32.1	03	CENTRAL REDUCTION GEARS
1.32.2	01	CENTRAL REDUCTION GEARS CONTROLS
1.32.2	02	CENTRAL REDUCTION GEARS CONTROLS
1.32.2	03	CENTRAL REDUCTION GEARS CONTROLS
1.32.4		DIFFERENTIAL GEARS
1.32.6		LOCK, DIFFERENTIAL
1.32.6/01		REAR HYDRAULIC DIFF. LOCK WITH ELECTRO - HYDR. ENGAGEMENT - LOCK, DIFFERENTIAL (VAR.331382-332382-333382-334382-335382)
1.32.6/02		REAR HYDRAULIC DIFF. LOCK WITH ELECTRO - HYDR. ENGAGEMENT FOR SUPERSTEER - LOCK, DIFFERENTIAL (VAR.336382-337382-338382-339382)

TABLE OF CONTENTS

1.32.6/03		FRONT AXLE WITH ELECTROHYDR. DIFF. LOCK (30 KM/H)- PIPES (VAR.335323)
1.32.6/04		FRONT AXLE WITH ELECTROHYDR. DIFF. LOCK (40 KM/H) - PIPES (VAR.331323-332323-331329-335329)
1.32.6/05		SUPERSTEER FRONT AXLE - PIPES (VAR.330433-330434-331403-331403-331434-332434-333434)
1.32.7		DIFFERENTIAL LOCK CONTROL
1.33.0		IDLER CASE & COVERS - 4WD
1.33.0/01		4WD ELECTROHYDRAULIC COUPLING FOR MDC - IDLER CASE & COVERS (VAR.330307-331307-333307-334307)
1.33.1		4WD TRANSMISSION GEARINGS
1.33.1/01		REAR MECHANICAL DIFF. LOCK WITH MEGA PUMP AND OIL COOLER - SOLENOID VALVE CAPS (VAR.330381)
1.33.1/02	01	REAR MECH. DIFF. LOCK WITH EL.-HYDR. ENGAGEMENT AND MECH. TRANSM. - SOLENOID VALVE CAPS - C6389 (VAR.331381-334381-335381)
1.33.1/02	01A	REAR MECH. DIFF. LOCK WITH EL.-HYDR. ENGAGEMENT AND MECH. TRANSM. - SOLENOID VALVE CAPS - D6389 (VAR.331381-334381-335381)
1.33.1/02	02	REAR MECH. DIFF. LOCK WITH EL.-HYDR. ENGAGEMENT AND MECH. TRANSM. - SOLENOID VALVE (VAR.331381-334381-335381)
1.33.1/03	01	REAR HYDRAULIC DIFF. LOCK WITH ELECTRO-HYDR. ENGAGEMENT - SOLENOID VALVE CAPS - C6389 (VAR.331382-332382-333382-334382-335382)
1.33.1/03	01A	REAR HYDRAULIC DIFF. LOCK WITH ELECTRO-HYDR. ENGAGEMENT - SOLENOID VALVE CAPS - D6389 (VAR.331382-332382-333382-334382-335382)
1.33.1/03	02	REAR HYDRAULIC DIFF. LOCK WITH ELECTRO-HYDR. ENGAGEMENT - SOLENOID VALVE (VAR.331382-332382-333382-334382-335382)
1.33.1/04	01	REAR HYDRAULIC DIFF. LOCK WITH ELECTRO-HYDR. ENGAGEMENT FOR SUPERSTEER - SOLENOID VALVE - C6389 (VAR.336382-337382-338382-339382)
1.33.1/04	01A	REAR HYDRAULIC DIFF. LOCK WITH ELECTRO-HYDR. ENGAGEMENT FOR SUPERSTEER - SOLENOID VALVE - D6389 (VAR.336382-337382-338382-339382)
1.33.1/04	02	REAR HYDRAULIC DIFF. LOCK WITH ELECTRO-HYDR. ENGAGEMENT FOR SUPERSTEER - SOLENOID VALVE CAPS (VAR.336382-337382-338382-339382)
1.33.1/05	01	4WD ELECTROHYDRAULIC COUPLING - DRIVE SHAFT (VAR.330307-331307)
1.33.1/05	02	4WD ELECTROHYDRAULIC COUPLING - TRANSMISSION GEARINGS (VAR.330307-331307)
1.33.1/05	03	4WD ELECTROHYDRAULIC COUPLING - TRANSMISSION GEARINGS (VAR.330307-331307)
1.33.1/05	04	4WD ELECTROHYDRAULIC COUPLING FOR WATERPROOF - DRIVE SHAFT (VAR.333307-334307)
1.33.1/06	01	4WD AUTOMATIC COUPLING FOR SUPERSTEER AND WATERPROOF - DRIVE SHAFT (VAR.332310-333310)
1.33.1/06	02	4WD AUTOMATIC COUPLING FOR SUPERSTEER AND WATERPROOF - TRANSMISSION GEARINGS (VAR.332310-333310)
1.33.1/06	03	4WD AUTOMATIC COUPLING FOR SUPERSTEER AND WATERPROOF -TRANSMISSION GEARINGS (VAR.332310-333310)
1.33.1/07	01	4WD AUTOMATIC COUPLING FOR SUPERSTEER - DRIVE SHAFT (VAR.330310-331310)
1.33.1/07	02	4WD AUTOMATIC COUPLING FOR SUPERSTEER - TRANSMISSION GEARINGS (VAR.330310-331310)
1.33.1/07	03	4WD AUTOMATIC COUPLING FOR SUPERSTEER - TRANSMISSION GEARINGS (VAR.330310-331310)
1.33.1/08	01	REAR MECH. DIFF. LOCK FOR POWER SHUTTLE - SOLENOID VALVE CAPS - C6389 (VAR.332381)
1.33.1/08	01A	REAR MECH. DIFF. LOCK FOR POWER SHUTTLE - SOLENOID VALVE CAPS - D6389 (VAR.332381)
1.33.1/08	02	REAR MECH. DIFF. LOCK FOR POWER SHUTTLE - SOLENOID VALVE CAPS (VAR.332381)
1.33.2	01	4WD IDLER CONTROLS

TABLE OF CONTENTS

1.33.2	02	4WD IDLER CONTROLS
1.34.2		REVERSE CONTROL
1.34.2/01		28X16 FOR 16X16 MECHANICAL TRANSMISSION (CREEPER) - LEVER AND BELLOWS (VAR.330111)
1.34.2/02		44X16 FOR 32X16 HI-LO AND POWER SHUTTLE - LEVER AND BELLOWS (VAR.331111)
1.38.5		PROPELLER SHAFT - 4WD
1.38.5/01		4WD WATERPROOF TRANSMISSION (VAR.332448-333448)
1.38.5/02	01	WATERPROOF TRANSM. FOR SUPERSTEER - 4WD PROPELLER SHAFT (VAR.334448-335448-336448-337448-338448)
1.38.5/02	02	WATERPROOF TRANSM. FOR SUPERSTEER - 4WD PROPELLER SHAFT (VAR.334448-335448-336448-337448-338448)
1.40.0/01		FRONT AXLE - BOX - 4WD
1.40.0/02		4WD FRONT AXLE - STEERING KNUCKLE
1.40.0/03		4WD FRONT AXLE - HUB
1.40.0/05		FRONT AXLE - SUPPORT - 4WD
1.40.0/06	01	4WD FRONT AXLE - BEVEL GEAR/PINION SET
1.40.0/06	02	4WD FRONT AXLE - BEVEL GEAR/PINION SET
1.40.0/06	03	4WD FRONT AXLE - BEVEL GEAR/PINION SET
1.40.0/06	04	4WD FRONT AXLE - BEVEL GEAR/PINION SET
1.40.0/07		4WD FRONT AXLE - DIFFERENTIAL
1.40.0/10	01	FRONT AXLE - DIFFERENTIAL GEARS AND SHAFT - 4WD
1.40.0/10	02	FRONT AXLE - DIFFERENTIAL GEARS AND SHAFT - 4WD
1.40.0/10A		4WD FRONT AXLE - DIFFERENTIAL SHAFT - BREAKDOWN
1.40.0/12		4WD FRONT AXLE - HYDRAULIC STEERING CYLINDER
1.40.0/12A		4WD FRONT AXLE - HYDRAULIC STEERING CYLINDER - BREAKDOWN
1.40.1/07		FRONT AXLE W/LIMITED SLIP DIFF, L/FRONT BRAKES (30 KM/H) - DIFFERENTIAL (VAR.330328)
1.40.2/06	01	FRONT AXLE W/LIMITED SLIP DIFF, L/FRONT BRAKES (40 KM/H) - BEVEL GEAR/PINION SET (VAR.332328)
1.40.2/06	02	FRONT AXLE W/LIMITED SLIP DIFF, L/FRONT BRAKES (40 KM/H) - SHIMS (VAR.332328)
1.40.2/06	03	FRONT AXLE W/LIMITED SLIP DIFF, L/FRONT BRAKES (40 KM/H) - SHIMS (VAR.332328)
1.40.2/06	04	FRONT AXLE W/LIMITED SLIP DIFF, L/FRONT BRAKES (40 KM/H) - SHIMS (VAR.332328)
1.40.2/07		FRONT AXLE W/LIMITED SLIP DIFF, L/FRONT BRAKES (40 KM/H) - DIFFERENTIAL (VAR.332328)
1.40.3/01		FRONT AXLE WITH LIMITED SLIP DIFF., WITH FRONT BRAKE (40 KM/H) - BOX (VAR.331324)
1.40.3/02		FRONT AXLE WITH LIMITED SLIP DIFF., WITH FRONT BRAKE (40 KM/H) - STEERING KNUCKLE (VAR.331324)
1.40.3/03		FRONT AXLE WITH LIMITED SLIP DIFF., WITH FRONT BRAKE (40 KM/H) - HUB (VAR.331324)
1.40.3/06	01	FRONT AXLE WITH LIMITED SLIP DIFF., WITH FRONT BRAKE (40 KM/H) - BEVEL GEAR/PINION SET (VAR.331324)
1.40.3/06	02	FRONT AXLE WITH LIMITED SLIP DIFF., WITH FRONT BRAKE (40 KM/H) - SHIMS (VAR.331324)

TABLE OF CONTENTS

1.40.3/06	03	FRONT AXLE WITH LIMITED SLIP DIFF., WITH FRONT BRAKE (40 KM/H) - SHIMS (VAR.331324)
1.40.3/06	04	FRONT AXLE WITH LIMITED SLIP DIFF., WITH FRONT BRAKE (40 KM/H) - SHIMS (VAR.331324)
1.40.3/07		FRONT AXLE WITH LIMITED SLIP DIFF., WITH FRONT BRAKE (40 KM/H) - DIFFERENTIAL (VAR.331324)
1.40.3/10	01	FRONT AXLE WITH LIMITED SLIP DIFF., WITH FRONT BRAKE (40 KM/H) - DIFFER. GEARS AND SHAFT (VAR.331324)
1.40.3/10	02	FRONT AXLE WITH LIMITED SLIP DIFF., WITH FRONT BRAKE (40 KM/H) - DIFFER. GEARS AND SHAFT (VAR.331324)
1.40.3/10	03	FRONT AXLE WITH LIMITED SLIP DIFF., WITH FRONT BRAKE (40 KM/H) - COVER PLATE (VAR.331324)
1.40.3/10A		DIFFERENTIAL SHAFT - BREAKDOWN
1.40.3/12		FRONT AXLE WITH LIMITED SLIP DIFF., WITH FRONT BRAKE (40 KM/H) - HYDR. STEER. CYL. (VAR.331324)
1.40.3/13		FRONT AXLE WITH LIMITED SLIP DIFF., WITH FRONT BRAKE (40 KM/H) - PIPES (VAR.331324)
1.40.4/05		FRONT AXLE WITH ELECTROHYDR. DIFF. LOCK (30 KM/H) - SUPPORT (VAR.335323)
1.40.4/07		FRONT AXLE WITH ELECTROHYDR. DIFF. LOCK (30 KM/H) - DIFFERENTIAL (VAR.335323)
1.40.4/08	01	FRONT AXLE WITH ELECTROHYDR.DIFF. LOCK (30 KM/H)-HYDRAULIC DIFF.LOCK CONTROL (VAR.335323)
1.40.4/08	02	FRONT AXLE WITH ELECTROHYDR. DIFF. LOCK (30 KM/H) - HYDRAULIC DIFF. LOCK CONTROL (VAR.335323)
1.40.4/10	01	FRONT AXLE WITH ELECTROHYDR. DIFF. LOCK (30 KM/H) - HALF AXLE (VAR.335323)
1.40.4/10	02	FRONT AXLE WITH ELECTROHYDR. DIFF. LOCK (30 KM/H) - EPICYCLIC REDUCTION GEAR (VAR.335323)
1.40.4/10A		DIFFERENTIAL SHAFT - BREAKDOWN
1.40.5/05		FRONT AXLE WITH ELECTROHYDR. DIFF. LOCK (40 KM/H) - SUPPORT (VAR.331323-332323)
1.40.5/06	01	FRONT AXLE WITH ELECTROHYDR. DIFF. LOCK (40 KM/H) - BEVEL GEAR/PINION SET (VAR.331323-332323)
1.40.5/06	02	FRONT AXLE WITH ELECTROHYDR. DIFF. LOCK (40 KM/H) - SHIMS (VAR.331323-332323)
1.40.5/06	03	FRONT AXLE WITH ELECTROHYDR. DIFF. LOCK (40 KM/H) - SHIMS (VAR.331323-332323)
1.40.5/06	04	FRONT AXLE WITH ELECTROHYDR. DIFF. LOCK (40 KM/H) - SHIMS (VAR.331323-332323)
1.40.5/07		FRONT AXLE WITH ELECTROHYDR. DIFF. LOCK (40 KM/H) - DIFFERENTIAL (VAR.331323-332323)
1.40.5/08	01	FRONT AXLE WITH ELECTROHYDR. DIFF. LOCK (40 KM/H) - HYDRAULIC DIFF. LOCK CONTROL (VAR.331323-332323)
1.40.5/08	02	FRONT AXLE WITH ELECTROHYDR. DIFF. LOCK (40 KM/H)-HYDRAULIC DIFF. LOCK CONTROL (VAR.331323-332323)
1.40.5/10	01	FRONT AXLE WITH ELECTROHYDR. DIFF. LOCK (40 KM/H) - HALF AXLE (VAR.331323-332323)
1.40.5/10	02	FRONT AXLE WITH ELECTROHYDR. DIFF. LOCK (40 KM/H) - EPICYCLIC REDUCTION GEAR (VAR.331323-332323)
1.40.6/01		FRONT AXLE WITH ELECTROHYDR. DIFF. LOCK WITH FRONT BRAKE (40 KM/H) - BOX (VAR.331329-335329)
1.40.6/02		FRONT AXLE WITH ELECTROHYDR.DIF.LOCK WITH FRONT BRAKE (40 KM/H)-STEERING KNUCKLE (VAR.331329-335329)
1.40.6/03		FRONT AXLE WITH ELECTROHYDR. DIFF. LOCK WITH FRONT BRAKE (40 KM/H) - HUB (VAR.331329-335329)
1.40.6/05		FRONT AXLE WITH ELECTROHYDR. DIFF. LOCK WITH FRONT BRAKE (40 KM/H) - SUPPORT (VAR.331329-335329)
1.40.6/06	01	FRONT AXLE WITH ELECTR.DIFF.LOCK WITH FRONT BRAKE(40 KM/H)-BEVEL GEAR/PINION SET (VAR.331329-335329)

TABLE OF CONTENTS

1.40.6/06	02	FRONT AXLE WITH ELECTROHYDR. DIFF. LOCK WITH FRONT BRAKE (40 KM/H) - SHIMS (VAR.331329-335329)
1.40.6/06	03	FRONT AXLE WITH ELECTROHYDR. DIFF. LOCK WITH FRONT BRAKE (40 KM/H) - SHIMS (VAR.331329-335329)
1.40.6/06	04	FRONT AXLE WITH ELECTROHYDR. DIFF. LOCK WITH FRONT BRAKE (40 KM/H) - SHIMS (VAR.331329-335329)
1.40.6/07		FRONT AXLE WITH ELECTROHYDR. DIFF. LOCK WITH FRONT BRAKE (40 KM/H) - DIFFER. (VAR.331329-335329)
1.40.6/08	01	FRONT AXLE WITH ELECTR.DIF.LOCK WITH FRONT BRAKE (40 KM/H)-HYDR.DIFF.LOCK CONTR. (VAR.331329-335329)
1.40.6/08	02	FRONT AXLE WITH EL.HYDR.DIFF.LOCK WITH FRONT BRAKE(40KM/H)-HYDR.DIFF.LOCK CONTR. (VAR.331329-335329)
1.40.6/10	01	FRONT AXLE WITH ELECTROHYDR. DIFF. LOCK WITH FRONT BRAKE (40 KM/H) - HALF AXLE (VAR.331329-335329)
1.40.6/10	02	FRONT AXLE WITH ELECTROHYDR. DIFF. LOCK WITH FRONT BRAKE (40 KM/H)-COVER PLATE (VAR.331329-335329)
1.40.6/10	03	FRONT AXLE WITH EL.HYDR.DIFF.LOCK WITH FRONT BRAKE(40 KM/H)-EPICYCLIC REDUC.GEAR (VAR.331329-335329)
1.40.6/10A		DIFFERENTIAL SHAFT - BREAKDOWN
1.40.6/13		FRONT AXLE WITH ELECTROHYDR. DIFF. LOCK WITH FRONT BRAKE (40 KM/H)-PIPES (VAR.331329-335329)
1.40.7/01		SUPERSTEER FRONT AXLE LESS FRONT BRAKE (30 KM/H) - BOX (VAR.330433-331433)
1.40.7/02	01	SUPERSTEER FRONT AXLE LESS FRONT BRAKE (30 KM/H) - STEERING KNUCKLE (VAR.330433-331433)
1.40.7/02	02	SUPERSTEER FRONT AXLE LESS FRONT BRAKE (30 KM/H) - STEERING KNUCKLE (VAR.330433-331433)
1.40.7/03		SUPERSTEER FRONT AXLE LESS FRONT BRAKE (30 KM/H) - HUB (VAR.330433-331433)
1.40.7/05		SUPERSTEER FRONT AXLE LESS FRONT BRAKE (30 KM/H) - SUPPORT (VAR.330433-331433)
1.40.7/06	01	SUPERSTEER FRONT AXLE LESS FRONT BRAKE (30 KM/H) - BEVEL GEAR/PINION SET (VAR.330433)
1.40.7/06	02	SUPERSTEER FRONT AXLE LESS BRAKE (30 KM/H) FOR WATERPROOFING - BEVEL GEAR PAIR (VAR.331433)
1.40.7/06	03	SUPERSTEER FRONT AXLE LESS FRONT BRAKE (30 KM/H) - SHIMS (VAR.330433-331433)
1.40.7/06	04	SUPERSTEER FRONT AXLE LESS FRONT BRAKE (30 KM/H) - SHIMS (VAR.330433-331433)
1.40.7/06	05	SUPERSTEER FRONT AXLE LESS FRONT BRAKE (30 KM/H) - SHIMS (VAR.330433-331433)
1.40.7/07		SUPERSTEER FRONT AXLE LESS FRONT BRAKE (30 KM/H) - DIFFERENTIAL (VAR.330433-331433)
1.40.7/10	01	SUPERSTEER FRONT AXLE LESS FRONT BRAKE (30 KM/H) - DIFF. GEARS AND SHAFT (VAR.330433-331433)
1.40.7/10	02	SUPERSTEER FRONT AXLE LESS FRONT BRAKE (30 KM/H) - DIFFERENTIAL GEARS AND SHAFT (VAR.330433-331433)
1.40.7/12	01	SUPERSTEER FRONT AXLE LESS FRONT BRAKE (30 KM/H) - HYDRAULIC STEERING CYLINDER (VAR.330433-331433)
1.40.7/12	02	SUPERSTEER FRONT AXLE LESS FRONT BRAKE (30 KM/H) - PIPES (VAR.330433-331433)
1.40.7/12A		HYDRAULIC STEERING CYLINDER - BREAKDOWN
1.40.8/01		SUPERSTEER FRONT AXLE WITH DIFF. LOCK LESS BRAKE - BOX (VAR.330434-331434-332434-333434)
1.40.8/02	01	SUPERSTEER FRONT AXLE WITH DIFF. LOCK LESS BRAKE-STEER. KNUCKLE (VAR.330434-331434-332434-333434)
1.40.8/02	02	SUPERSTEER FRONT AXLE WITH DIFF. LOCK LESS BRAKE-STEERING KNUCKLE (VAR.330434-331434-332434-333434)

TABLE OF CONTENTS

1.40.8/03		SUPERSTEER FRONT AXLE WITH DIFF. LOCK LESS BRAKE - HUB (VAR.330434-331434-332434-333434)
1.40.8/05	01	SUPERSTEER FRONT AXLE WITH DIFF. LOCK LESS BRAKE - SUPPORT (VAR.330434-331434-332434-333434)
1.40.8/05	02	SUPERSTEER FRONT AXLE WITH DIFF. LOCK LESS BRAKE - SHIM (VAR.330434-331434-332434-333434)
1.40.8/06	01	SUPERSTEER FRONT AXLE WITH DIFF. LOCK LESS BRAKE (30KM/H) - BEVEL GEAR/PINION SET (VAR.330434)
1.40.8/06	02	SUPERSTEER FRONT AXLE W/DIFF. LOCK LESS BRAKE (30KM/H) FOR WATERPROOF.-BEVEL GEAR PAIR (VAR.331434)
1.40.8/06	03	SUPERSTEER FRONT AXLE WITH DIFF. LOCK LESS BRAKE (40KM/H)-BEVEL GEAR/PINION SET (VAR.332434-333434)
1.40.8/06	04	SUPERSTEER FRONT AXLE WITH DIFF. LOCK LESS BRAKE - SHIMS (VAR.330434-331434-332434-333434)
1.40.8/06	05	SUPERSTEER FRONT AXLE WITH DIFF. LOCK LESS BRAKE - SHIMS (VAR.330434-331434-332434-333434)
1.40.8/06	06	SUPERSTEER FRONT AXLE WITH DIFF. LOCK LESS BRAKE - SHIMS (VAR.330434-331434-332434-333434)
1.40.8/08		SUPERSTEER FRONT AXLE WITH DIFF. LOCK LESS BRAKE - DIFF. (VAR.330434-331434-332434-333434)
1.40.8/10	01	SUPERSTEER FRONT AXLE WITH DIFF. LOCK LESS BRAKE - HALF AXLE (VAR.330434-331434-332434-333434)
1.40.8/10	02	SUPERSTEER FRONT AXLE WITH DIFF. LOCK LESS BRAKE - COVER PLATE (VAR.330434-331434-332434-333434)
1.40.8/10	03	SUPERSTEER FRONT AXLE WITH DIFF. LOCK LESS BRAKE - REDUCTION GEAR (VAR.330434-331434-332434-333434)
1.40.8/10	04	SUPERSTEER FRONT AXLE WITH DIFF. LOCK LESS BRAKE - PIPES (VAR.330434-331434-332434-333434)
1.40.8/12	01	SUPERSTEER FRONT AXLE WITH DIFF.LOCK LESS BRAKE-HYDR.STEERING CYL. (VAR.330434-331434-332434-333434)
1.40.8/12	02	SUPERSTEER FRONT AXLE WITH DIFF. LOCK LESS BRAKE - PIPES (VAR.330434-331434-332434-333434)
1.40.9/01		SUPERSTEER FRONT AXLE WITH DIFF. LOCK WITH BRAKE (40KM/H) - BOX (VAR.331403)
1.40.9/02	01	SUPERSTEER FRONT AXLE WITH DIFF. LOCK WITH BRAKE (40KM/H) - STEERING PIVOT PINS (VAR.331403)
1.40.9/02	02	SUPERSTEER FRONT AXLE WITH DIFF. LOCK WITH BRAKE (40KM/H) - STEERING KNUCKLE (VAR.331403)
1.40.9/03		SUPERSTEER FRONT AXLE WITH DIFF. LOCK WITH BRAKE (40KM/H) - HUB (VAR.331403)
1.40.9/05	01	SUPERSTEER FRONT AXLE WITH DIFF. LOCK WITH BRAKE (40KM/H) - SUPPORT (VAR.331403)
1.40.9/05	02	SUPERSTEER FRONT AXLE WITH DIFF. LOCK WITH BRAKE (40KM/H) - SHIMS (VAR.331403)
1.40.9/06	01	SUPERSTEER FRONT AXLE WITH DIFF. LOCK WITH BRAKE (40KM/H) - BEVEL GEAR/PINION SET (VAR.331403)
1.40.9/06	02	SUPERSTEER FRONT AXLE WITH DIFF. LOCK WITH BRAKE (40KM/H) - SHIMS (VAR.331403)
1.40.9/06	03	SUPERSTEER FRONT AXLE WITH DIFF. LOCK WITH BRAKE (40KM/H) - SHIMS (VAR.331403)
1.40.9/06	04	SUPERSTEER FRONT AXLE WITH DIFF. LOCK WITH BRAKE (40KM/H) - SHIMS (VAR.331403)
1.40.9/08		SUPERSTEER FRONT AXLE WITH DIFF. LOCK WITH BRAKE (40KM/H) - DIFFERENTIAL (VAR.331403)
1.40.9/10	01	SUPERSTEER FRONT AXLE WITH DIFF. LOCK WITH BRAKE (40KM/H) - HALF AXLE (VAR.331403)
1.40.9/10	02	SUPERSTEER FRONT AXLE WITH DIFF. LOCK WITH BRAKE (40KM/H) - COVER PLATE (VAR.331403)
1.40.9/10	03	SUPERSTEER FRONT AXLE WITH DIFF. LOCK WITH BRAKE (40KM/H) - REDUCTION GEAR (VAR.331403)

TABLE OF CONTENTS

1.40.9/10	04	SUPERSTEER FRONT AXLE WITH DIFF. LOCK WITH BRAKE (40KM/H) - PIPES (VAR.331403)
1.40.9/10	05	SUPERSTEER FRONT AXLE WITH DIFF. LOCK WITH BRAKE (40KM/H) - COVER PLATE (VAR.331403)
1.40.9/12	01	SUPERSTEER FRONT AXLE WITH DIFF. LOCK WITH BRAKE (40KM/H) - HYDR.STEERING CYL. (VAR.331403)
1.40.9/12	02	SUPERSTEER FRONT AXLE WITH DIFF. LOCK WITH BRAKE (40KM/H) - PIPES (VAR.331403)
1.40.9/17		SUPERSTEER FRONT AXLE WITH DIFF. LOCK WITH BRAKE (40KM/H) - PIPES (VAR.331403)
1.41.0	01	2WD FRONT AXLE - BOX (VAR.330581)
1.41.0	02	2WD FRONT AXLE - STEERING KNUCKLE AND HUB (VAR.330581)
1.41.0	03	2WD FRONT AXLE - STEERING ROD (VAR.330581)
1.41.0	04	2WD FRONT AXLE - STEERING CYLINDER (VAR.330581)
1.41.0/01	01	2WD FRONT AXLE WITH LOW PROFILE - BOX (VAR.330582)
1.41.0/01	02	2WD FRONT AXLE WITH LOW PROFILE - STEERING KNUCKLE AND HUB (VAR.330582)
1.41.0/01	03	2WD FRONT AXLE WITH LOW PROFILE - ROD (VAR.330582)
1.41.0/01	04	2WD FRONT AXLE WITH LOW PROFILE - STEERING CYLINDER (VAR.330582)
1.42.0		HYDRAULIC PUMP
1.42.0/ A		HYDRAULIC PUMP - BREAKDOWN
1.42.0/ B		HYDRAULIC PUMP - BREAKDOWN - C5996
1.42.0/ C		HYDRAULIC PUMP - BREAKDOWN - D5996
1.43.0		2WD FRONT MUDGUARDS (VAR.330863)
1.43.0/01		FRONT FENDERS (4WD) (VAR.330484-331484)
1.43.0/02		WIDE FRONT FENDERS (4WD) (VAR.330485-331485)
1.43.0/03		FRONT FENDERS (4WD) FOR SUPERSTEER (VAR.334484)
1.43.0/04		WIDE FRONT FENDERS (4WD) FOR SUPERSTEER (VAR.332485)
1.43.0/05	01	NARROW DYNAMIC FRONT FENDERS (4WD) (VAR.338486)
1.43.0/05	02	NARROW DYNAMIC FRONT FENDERS (4WD) - SUPPORTS (VAR.338486)
1.43.0/05A		DYNAMIC FRONT FENDERS (4WD) - SUPPORTS - BREAKDOWN
1.43.0/06	01	WIDE DYNAMIC FRONT FENDERS (4WD) (VAR.330486)
1.43.0/06	02	WIDE DYNAMIC FRONT FENDERS (4WD) - SUPPORTS (VAR.330486)
1.44.0		FRONT WEIGHT CARRIER WITH INTEGRATED TOW HOOK (VAR.330234-331234)
1.44.0/01		FRONT SUPPORT AND WEIGHTS WITH 4 HEAVY PLATES (VAR.330235-331235)
1.44.0/02		FRONT WEIGHT SUPPORT WITH 6 PLATES (VAR.330236-331236)
1.48.1	01	FINAL DRIVE, GEARS AND SHAFTS
1.48.1	02	FINAL DRIVE, GEARS AND SHAFTS
1.48.1	03	FINAL DRIVE, GEARS AND SHAFTS

TABLE OF CONTENTS

1.48.1/01	01	WATERPROOF TRANSMISSION - FINAL DRIVE, GEARS AND SHAFTS (VAR.332448-333448-334448-335448-330449)
1.48.1/01	02	WATERPROOF TRANSMISSION - FINAL DRIVE, GEARS AND SHAFTS (VAR.332448-333448-334448-335448-330449)
1.48.2		4 REAR BALLAST (50KG) (VAR.330470)
1.48.2/01		6 REAR BALLAST (32KG) (VAR.330471)
1.65.3		PARKING BRAKE SYSTEM
1.65.5		PARKING BRAKE
1.67.2		HANDBRAKE CONTROL
1.68.2		BRAKING SYSTEM TANK
1.68.5		BRAKE PIPING
1.68.5/01	01	FRONT AXLE WITH FRONT BRAKE (40 KM/H) - VALVE (VAR.331324-331329-335329)
1.68.5/01	02	FRONT AXLE WITH FRONT BRAKE (40 KM/H) - PIPES (VAR.331324-331329-335329)
1.68.5/02		SUPERSTEER FRONT AXLE WITH DIFF. LOCK WITH BRAKE (40KM/H) - VALVE (VAR.331403)
1.74.1		BATTERY MOUNTING
1.74.1/01		FRONT AXLE WITH EL.HYDR. DIFF. LOCK (40 KM/H) FOR FRONT HPL- BATTERY MOUNTING (VAR.332323-335329)
1.75.0		ELECTRIC CONTROLS
1.75.0/01		16X16 AND 32X16 HYDRAULIC TRANSMISSION - ELECTRONIC CONTROL UNIT (VAR.330275-330278)
1.75.0/02		FRONT HPL AND PTO CHASSIS MOUNTED WITH ELECTRONIC CONTROL - ELECTRIC CONTROLS (VAR.330404-331404-332404-333404)
1.75.0/02A		HPL PANEL - BREAKDOWN
1.75.0/03		4WD AUTOMATIC COUPLING FOR SUPERSTEER - ELECTRIC CONTROLS (VAR.330310-331310-332310-333310)
1.75.1		HPL WITH ELECTRONIC DRAFT CONTROL - ELECTRONIC CONTROL UNIT (VAR.330127-331127-332127-333127)
1.75.1/01		SUPERSTEER FRONT AXLE - ELECTRONIC CONTROL MODULE (VAR.331403-330433-331433-330434-331434-332434-333434)
1.75.3	01	BATTERY CABLES - C6502
1.75.3	01A	BATTERY CABLES - D6502
1.75.3/01		BATTERY CABLES LESS BATTERY ISOLAR SWITCH (VAR.338798)
1.75.4	01	AUXILIARY CABLES
1.75.4	02	AUXILIARY CABLES
1.75.4	03	AUXILIARY CABLES - L/CAB
1.75.4	04	AUXILIARY CABLES - W/CAB
1.75.4/01		AUXILIARY CABLES LESS BATTERY ISOLATOR SWICTH (VAR.333006)
1.75.4/02		ADDITIONAL POWER POINTS - ISO (VAR.330755)
1.75.4/03		ADDITIONAL POWER POINTS - NA (VAR.330756)
1.75.4/04		16X16 AND 32X16 HYDRAULIC TRANSMISSION - AUXILIARY CABLES (VAR.330275-330278)

TABLE OF CONTENTS

1.75.4/05		FRONT HPL AND PTO CHASSIS MOUNTED WITH ELECTRONIC CONTROL - AUXILIARY CABLES (VAR.330404-331404-332404-333404)
1.75.4/06		FRONT HPL AND PTO AXLE MOUNTED WITH ELECTRONIC CONTROL AND SUPERSTEER - ELECTRIC WIRES (VAR.330812-331812-332812-333812-336812-337812)
1.75.4/07		AIR HEATER ENGINE STARTING AID - HEATER, CABLES AND BRACKETS (VAR.332206)
1.75.4/08		AIR HEATER ENGINE STARTING AID LESS BATTERY ISOLATOR SWITH (VAR.336206)
1.75.6	01	LIGHTING COMPONENTS - L/CAB
1.75.6	02	LIGHTING COMPONENTS - L/CAB
1.75.6	03	HEADLAMP, HOOD - L/CAB
1.80.1	01	POWER TAKE-OFF (540 RPM)
1.80.1	02	POWER TAKE-OFF (540 RPM)
1.80.1/01	01	POWER TAKE-OFF (540-540E RPM) LESS GROUND SPEED - SHAFTS AND GEARS (VAR.331818-333818)
1.80.1/01	02	POWER TAKE-OFF (540-540E RPM) LESS GROUND SPEED - ROD AND FORK (VAR.331818-333818)
1.80.1/02	01	POWER TAKE-OFF (540-540E RPM) WITH GROUND SPEED - SHAFTS AND GEARS (VAR.330804-331804)
1.80.1/02	02	POWER TAKE-OFF (540-540E RPM) WITH GROUND SPEED - ROD AND FORK (VAR.330804-331804)
1.80.1/02	03	POWER TAKE-OFF (540-540E RPM) WITH GROUND SPEED - LEVER AND BRACKET (VAR.330804-331804)
1.80.1/02	04	POWER TAKE-OFF (540-540E RPM) WITH GROUND SPEED - ROD AND HANDLE (VAR.330804-331804)
1.80.1/03	01	POWER TAKE-OFF (540-540E-1000 RPM) WITH GROUND SPEED - SHAFTS AND GEARS (VAR.330817-331817)
1.80.1/03	02	POWER TAKE-OFF (540-540E-1000 RPM) WITH GROUND SPEED - SHAFTS AND GEARS (VAR.330817-331817)
1.80.1/03	03	POWER TAKE-OFF (540-540E-1000 RPM) WITH GROUND SPEED - SHAFT AND COVER (VAR.330817-331817)
1.80.1/03	04	POWER TAKE-OFF (540-540E-1000 RPM) WITH GROUND SPEED - ROD AND FORK (VAR.330817-331817)
1.80.1/03	05	POWER TAKE-OFF (540-540E-1000 RPM) WITH GROUND SPEED - COUPLING (VAR.330817-331817)
1.80.1/03	06	POWER TAKE-OFF (540-540E-1000 RPM) WITH GROUND SPEED - ROD AND HANDLE (VAR.330817-331817)
1.80.1/04	01	POWER TAKE-OFF (540-1000 RPM) - ISO - COVER, SHAFTS AND GEARS (VAR.330805-331805)
1.80.1/04	02	POWER TAKE-OFF (540-1000 RPM) - ISO - ROD, FORK AND PLATES (VAR.330805-331805)
1.80.1/05	01	POWER TAKE-OFF (540-1000 RPM) - NA - COVER, SHAFTS AND GEARS (VAR.330808-331808)
1.80.1/05	02	POWER TAKE-OFF (540-1000 RPM) - NA - COUPLING (VAR.330808-331808)
1.80.1/06		GROUND PTO CONTROL LEVER (VAR.330837)
1.80.1/07		ON BOARD PTO CONTROL LEVER (VAR.330838-331838)
1.80.1/07A		ON BOARD PTO CONTROL LEVER (VAR.330838-331838) - BREAK DOWN
1.80.3		FRONT AXLE WITH EL.HYDR. DIFF. LOCK (40 KM/H) FOR FRONT HPL - CABLE (VAR.332323)
1.80.4	01	PTO ENGAGEMENT CLUTCH, SERVOCONTROL
1.80.4	02	PTO ENGAGEMENT CLUTCH, SERVOCONTROL
1.80.4/ A		PTO CLUTCH CONTROL ACTUATOR CYLINDER - BREAKDOWN

TABLE OF CONTENTS

1.80.4/01	01	FRONT AXLE WITH EL.HYDR. DIFF. LOCK (40 KM/H) FOR FRONT HPL - SERVOCONTROL (VAR.332323)
1.80.4/01	02	FRONT AXLE WITH EL.HYDR. DIFF. LOCK (40 KM/H) FOR FRONT HPL - SERVOCONTROL (VAR.332323)
1.80.5	01	FRONT HPL AND PTO CHASSIS MOUNTED - POWER TAKE-OFF (VAR.330404-331404-332404-333404-330789)
1.80.5	02	FRONT HPL AND PTO CHASSIS MOUNTED - POWER TAKE-OFF (VAR.330404-331404-332404-333404-330789)
1.80.5	03	FRONT HPL AND PTO CHASSIS MOUNTED - POWER TAKE-OFF (VAR.330404-331404-332404-333404-330789)
1.80.5	04	FRONT HPL AND PTO CHASSIS MOUNTED - VALVE AND PIPES (VAR.330404-331404-332404-333404-330789)
1.80.5/01	01	SUPERSTEER FRONT AXLE FOR FRONT HPL AXLE MOUNTED - PTO FRONT SHAFT AND GUARD (VAR.333434)
1.80.5/01	02	SUPERSTEER FRONT AXLE FOR FRONT HPL AXLE MOUNTED - COUPLING AND ELECTROMAGNETIC CLUTCH (VAR.333434)
1.80.5/01	03	SUPERSTEER FRONT AXLE FOR FRONT HPL AXLE MOUNTED - COUPLING FORK (VAR.333434)
1.80.5/01	04	SUPERSTEER FRONT AXLE FOR FRONT HPL AXLE MOUNTED - BOX AND DRIVE SHAFT (VAR.333434)
1.80.5/01A		BALL JOINT - BREAKDOWN
1.81.9	01	FRONT HPL AND PTO WITH MECHANICAL CONTROL - SUPPORT (VAR.330789)
1.81.9	02	FRONT HPL AND PTO WITH MECHANICAL CONTROL- ARMS AND CYLINDERS (VAR.330789)
1.81.9	03	FRONT HPL AND PTO WITH MECHANICAL CONTROL - LINK AND PINS (VAR.330789)
1.81.9	04	FRONT HPL AND PTO WITH MECHANICAL CONTROL - PIPES (VAR.330789)
1.81.9/ A		IMPLEMENT CARRIER - BREAKDOWN
1.81.9/01	01	FRONT HPL AND PTO CHASSIS MOUNTED WITH ELECTRONIC CONTROL - SUPPORTS (VAR.330404-331404-332404-333404)
1.81.9/01	02	FRONT HPL AND PTO CHASSIS MOUNTED WITH ELECTRONIC CONTROL - ARMS AND CYLINDERS (VAR.330404-331404-332404-333404)
1.81.9/01	03	FRONT HPL AND PTO CHASSIS MOUNTED WITH ELECTRONIC CONTROL - LINK AND PINS (VAR.330404-331404-332404-333404)
1.81.9/01	04	FRONT HPL AND PTO CHASSIS MOUNTED WITH ELECTRONIC CONTROL - PIPES (VAR.330404-331404-332404-333404)
1.81.9/02	01	SUPERSTEER FRONT AXLE FOR FRONT HPL AXLE MOUNTED-SUPPORT AND LIFT ARMS. (VAR.333434)
1.81.9/02	02	SUPERSTEER FRONT AXLE FOR FRONT HPL AXLE MOUNTED - TOP LINK WITH QUICK COUPLING (VAR.333434)
1.81.9/02	03	SUPERSTEER FRONT AXLE FOR FRONT HPL AXLE MOUNTED - CYLINDER AND PIPES. (VAR.333434)
1.81.9/02A		TOP LINK WITH QUICK COUPLING - BREAKDOWN
1.82.0		LIFTER, HOUSING AND COVERS
1.82.0/01		HPL WITH ELECTRONIC DRAFT CONTROL - COVER (VAR.330127-331127-332127-333127)
1.82.1	01	LIFTER, LINES
1.82.1	02	LIFTER, LINES
1.82.1	03	LIFTER, LINES
1.82.1/01		FRONT HPL AND PTO AXLE MOUNTED WITH ELECTRONIC CONTROL AND SUPERSTEER - PIPES (VAR.330812-331812)

TABLE OF CONTENTS

1.82.1/01A		FRONT CONTROL VALVE - BREAKDOWN
1.82.1/02		FRONT HPL AND PTO AXLE MOUNTED WITH ELECTRONIC CONTROL, SUPERSTEER AND MID-MOUNT VALVES-PIPES (VAR.332812-333812-337812)
1.82.1/03		FRONT HPL AND PTO AXLE MOUNTED WITH ELECTRONIC CONTROL AND SUPERSTEER - PIPES (VAR.336812)
1.82.2	01	MECHANICAL LIFT GROUND CONTROL - LEVER AND SHAFT (VAR.330834)
1.82.2	02	MECHANICAL LIFT GROUND CONTROL - LEVER AND SHAFT (VAR.330834)
1.82.4	01	LIFTER DISTRIBUTOR AND VALVES - BREAKDOWN - C6635
1.82.4	02	LIFTER DISTRIBUTOR AND VALVES - BREAKDOWN - C6635
1.82.4	03	LIFTER DISTRIBUTOR AND VALVES - BREAKDOWN - C6635
1.82.4	04	LIFTER DISTRIBUTOR AND VALVES - BREAKDOWN - C6635
1.82.4	05	LIFTER DISTRIBUTOR AND VALVES - BREAKDOWN - D6635
1.82.4	06	LIFTER DISTRIBUTOR AND VALVES - BREAKDOWN - D6635
1.82.4	07	LIFTER DISTRIBUTOR AND VALVES - BREAKDOWN - D6635
1.82.4	08	LIFTER DISTRIBUTOR AND VALVES - BREAKDOWN - D6635
1.82.5	01	LIFT CONTROL
1.82.5	02	LIFT CONTROL
1.82.5	03	LIFT CONTROL
1.82.5	04	LIFT CONTROL
1.82.5	05	LIFT CONTROL
1.82.5	06	LIFT CONTROL
1.82.5/01		HPL WITH ELECTRONIC DRAFT CONTROL - SUPPORT AND GUARDS (VAR.330127-331127-332127-333127)
1.82.6		CYLINDERS AND PISTONS
1.82.7	01	REMOTE VALVES
1.82.7	02	RINGS
1.82.7	03	REMOTE VALVES
1.82.7/ A	01	SIMPLE DOUBLE EFFECT DISTRIBUTOR WITH AUTOMATIC CUTOUT - BREAKDOWN
1.82.7/ A	02	SIMPLE DOUBLE EFFECT DISTRIBUTOR WITH AUTOMATIC CUTOUT - BREAKDOWN
1.82.7/ A	03	SIMPLE DOUBLE EFFECT DISTRIBUTOR WITH AUTOMATIC CUTOUT - BREAKDOWN
1.82.7/01	01	1 REAR REMOTE VALVE FOR MID-MOUNT AND EDC - CAPS AND FLANGE
1.82.7/01	02	1 REAR REMOTE VALVE FOR MID-MOUNT AND EDC - RINGS
1.82.7/01	03	1 REAR REMOTE VALVE FOR MID-MOUNT AND EDC - PIPES
1.82.7/01A	01	SIMPLE DOUBLE EFFECT DISTRIBUTOR WITH AUTOMATIC CUTOUT - BREAKDOWN
1.82.7/01A	02	SIMPLE DOUBLE EFFECT DISTRIBUTOR WITH AUTOMATIC CUTOUT - BREAKDOWN
1.82.7/01A	03	SIMPLE DOUBLE EFFECT DISTRIBUTOR WITH AUTOMATIC CUTOUT - BREAKDOWN

Thanks very much for your reading,

Want to get more information,

Please click here, Then get the complete manual

JustClickHere

NOTE:

If there is no response to click on the link above, please download the PDF document first, and then click on it.

Have any questions please write to me:
admin@servicemanualperfect.com